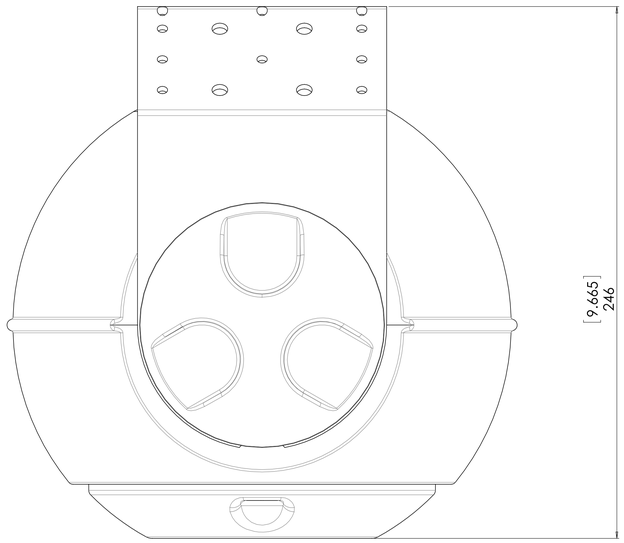

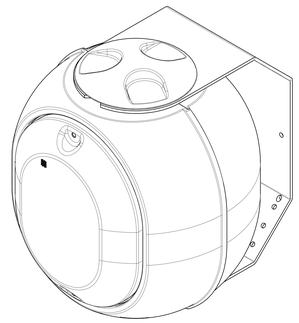

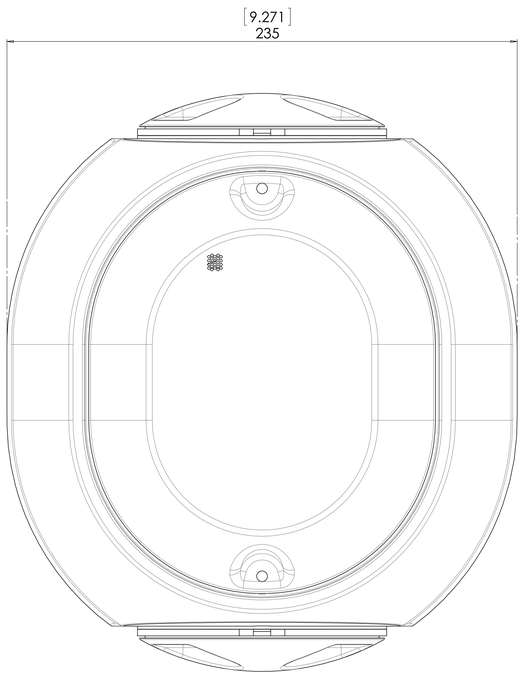

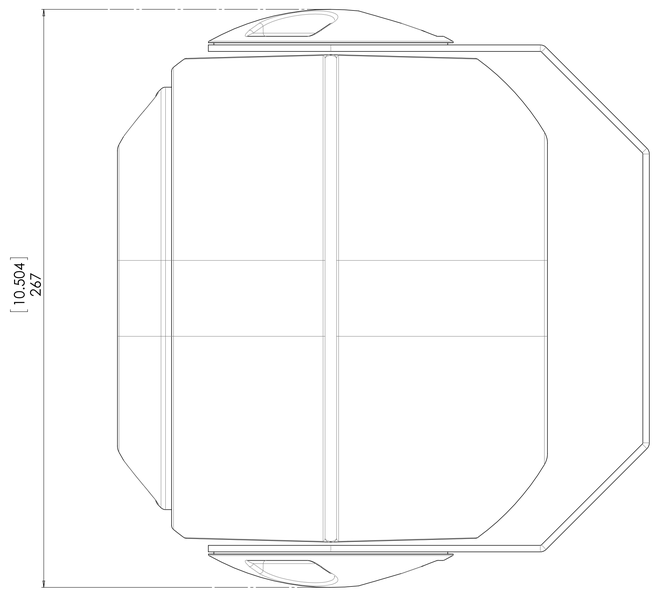

Great Sound in All Places™

Architectural Drawing

Product: AC 15

Date: 18th November 2013